Job Name:	
Address:	Sheet #:
Date:	Due Date:

SOUTHPORT
Engineered Systems · Home Services

☐ COVER ENDS WITH PLASTIC ☐ PICKUP ☐ DELIVERY

Contact:	
Phone #:	Pressure Class:

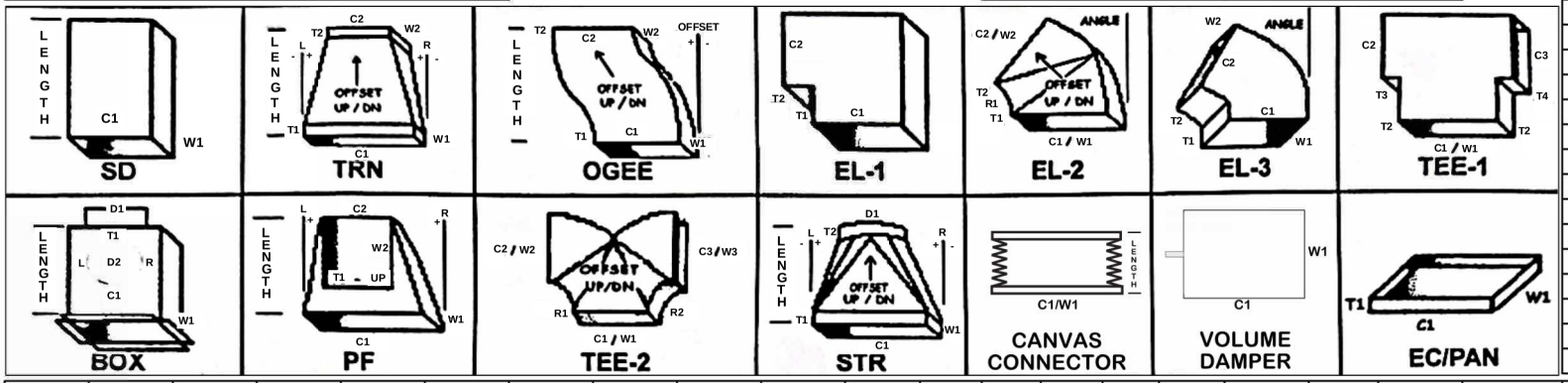

	Comments
A	S&D
B	TDC
C	RAW
D	NOTCH RAW
E	1/2" HEM
F	1/2" OUT
G	FURN. CONN.
H	1" OUT
I	1 1/2" OUT
J	2" OUT
K	VANES
L	EXPOSED
M	1" IN
N	TDC BOLTS/CLIPS/GASKET
O	EZ BOLTS/CLIPS/GASKET
P	CLEATS CUT TO SIZE
Q	

Model	Qty	C1 X W1	C2 X W2	C3 X W3	Length	D1	D2	D3	D4	R1	R2	T1	T2	T3	T4	Offset Up/Down	Offset L/R +/-	Angle	Liner (1", 1 1/2", 2")	Comm.	Remarks